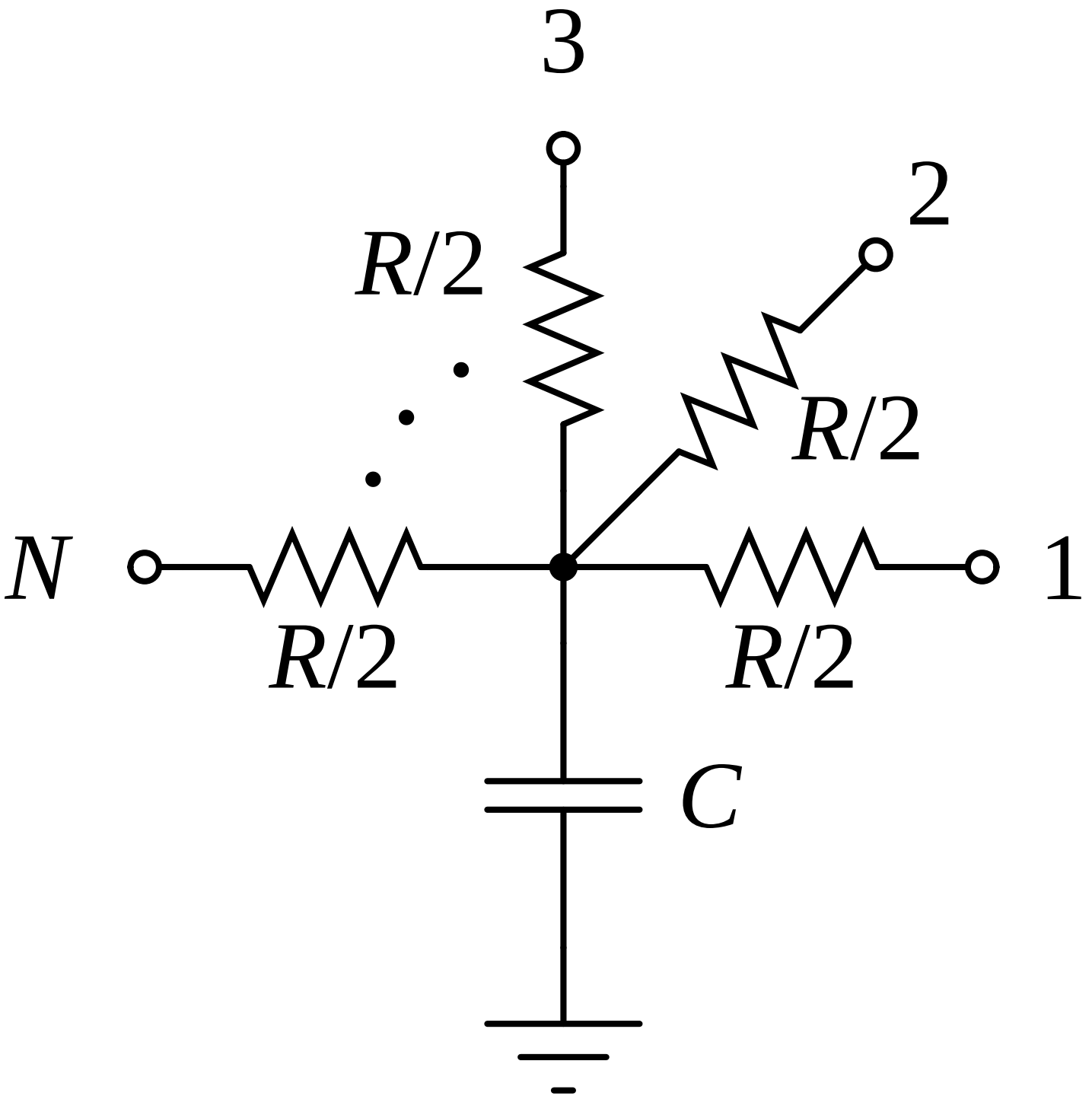
3
2
R/2
R/2
N
1
R/2
R/2
C